PRODUCT DISCRIPTION

INNOWELLE

C – HO – 14 – 50 – A1

- C – Design gear type
- HO – Transmission type
- 14 – Gear size
- 50 – Gear ratio
- A1 – Version

Design gear type

C - Component kit
B - Box
SB - Simplicity box

Transmission type

SO - Solid shaft open flexspline
SC - Solid shaft closed flexspline
HO - Hollow shaft open flexspline
HC - Hollow shaft closed flexspline
MO - Motor shaft open flexspline
MC - Motor shaft closed flexspline

Available gear sizes and ratios

Size \ Ratio	50	80	100	120	160
14 (35)	x	x	x		
17 (42)	x	x	x	x	
20 (50)	x	x	x	x	x
25 (63)	x	x	x	x	x
32 (80)	x	x	x	x	x

Technical specification for all gears.

Size	Ratio	Maximum Output Torque	Nominal Output Torque	Rated Output Torque	Emergency Stop Torque	Maximum Input Speed	Nominal Input Speed
		Nm	Nm	Nm	Nm	r/min	r/min
14 (35)	50	18	6,9	5,4	35	6000	3500
	80	23	11	7,8	47		
	100	28	11	7,8	54		
17 (42)	50	34	26	16	70	6000	
	80	43	27	22	87		
	100	54	39	24	110		
	120	54	39	24	86		
20 (50)	50	56	34	25	98	6000	
	80	74	47	34	127		
	100	82	49	40	147		
	120	87	49	40	147		
	160	92	49	40	147		
25 (63)	50	98	55	39	186	5600	
	80	137	87	63	255		
	100	157	108	67	284		
	120	167	108	67	304		
	160	176	108	67	314		
32 (80)	50	216	108	76	382	4800	
	80	304	167	118	568		
	100	333	216	137	647		
	120	353	216	137	686		
	160	372	216	137	686		

The values are preliminary. Final values will be set after the successful test results.

C-MC-20-120-A1

COMPONENT KIT, CLOSED FLEXSPLINE TYPE

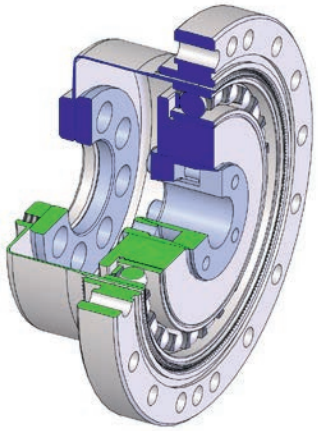

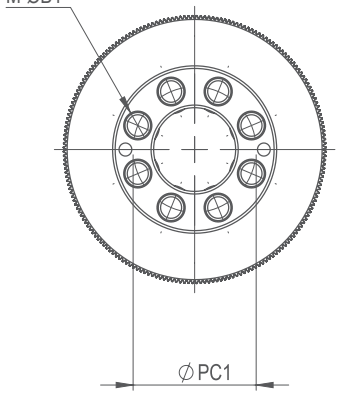

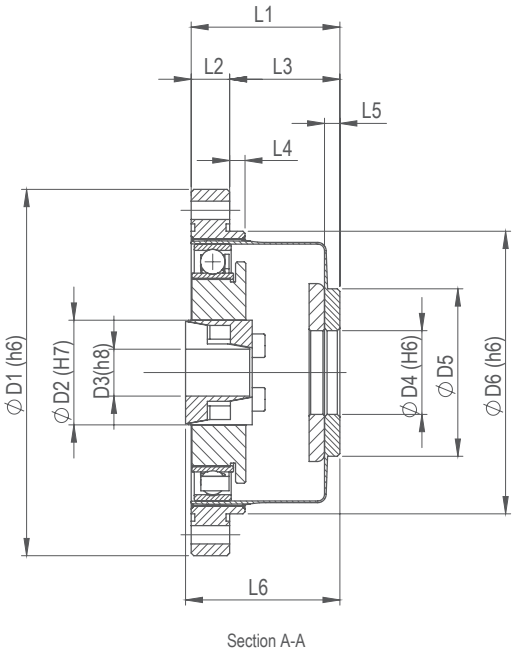

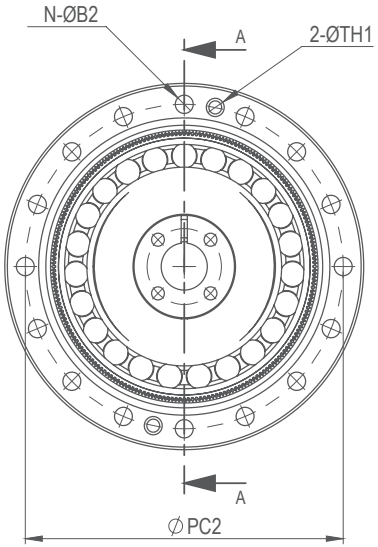

Size	ØPC1	M	ØB1	ØPC2	N	ØB2	TH1	ØD1	ØD2	ØD3	ØD4	ØD5	ØD6	L1	L2	L3	L4	L5	L6
14 (35)	Ø17	6	Ø4,5	Ø44	8 (12)	Ø3,5	M3	Ø50	Ø16	Ø6	Ø11	Ø23	Ø38	23,5	6	17,5	2	2,4	25
17 (42)	Ø19	6	Ø5,5	Ø54	16 (12)	Ø3,5	M3	Ø60	Ø18	Ø8	Ø10	Ø27	Ø47	26,5	6,5	20	2,5	3	28
20 (50)	Ø24	8	Ø5,5	Ø62	16 (12)	Ø3,5	M3	Ø70	Ø20	Ø9	Ø16	Ø32	Ø54	29	7,5	21,5	3	3	30
25 (63)	Ø30	8	Ø6,6	Ø77	16 (12)	Ø4,5	M4	Ø85	Ø22	Ø11	Ø20	Ø40	Ø67	34	10	24	3	3	34
32 (80)	Ø40	8	Ø9	Ø100	16 (12)	Ø5,5	M5	Ø110	Ø26	Ø14	Ø26	Ø52	Ø88	42	14	28	3	3,2	42

INNOWELLE